**BURNHAM®**
Commercial Boilers

## LEGEND CONNECTIONS

A = 4" SUPPLY (WATER)
B = 4" RETURN (WATER)
C = 6" FLANGED SUPPLY (150#) (STM.)
D = 3" RETURN (STEAM)
E = 2" WASHOUT
F = 1" WATER COLUMN
G = 3/4" AQUASTAT
H = 1-1/2" DRAIN
J = 3 X 4 HANDHOLE
K = 1-1/2" AUXILIARY CONNECTION
L = 2" RELIEF VALVE
M = 1/2" GAUGE
N = 1-1/2" SURFACE BLOWOFF
P = 1" OVERFLOW CONN.
Q = 12" NOMINAL FLUE DIAMETER

## RATINGS AND DATA

Shell Diameter : $31\frac{3}{8}$"
Gross Output – BHP : 81.1 (STM.)
Gross Output – BHP : 82.1 (WTR.)
Gross Output – MBH : 2714 (STM.)
Gross Output – MBH : 2749 (WTR.)
Gross Output – Lbs/Hr. : 2798 (STM.)
Net Rating – MBH : 2107
Net Rating – MBH : 2390
Relief Valve – Lbs/Hr. : 2798

Heating Surface – Sq. Ft.
Fireside – 310
Firetubes
Number – 82
Diameter – 2" O.D.

Firing Rate
1000 BTU Gas (MBH) – 3266
140000 BTU/Gal Oil (GPH) – 22.4

Water Content
Pounds – 2800 (STM.)
Pounds – 3500 (WTR.)
Gallons (U.S.) – 336 (STM.)
Gallons (U.S.) – 420 (WTR.)
Approximate Weight/LBS.
Dry – 5400
Wet – 8200 (STM.)
Wet – 8900 (WTR.)

## LEGEND

BS = BOTH SIDES
RS = RIGHT SIDE

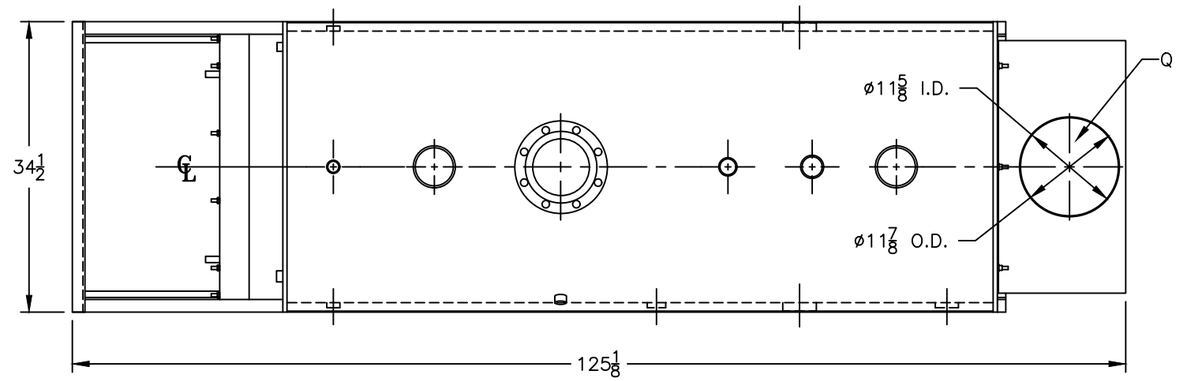


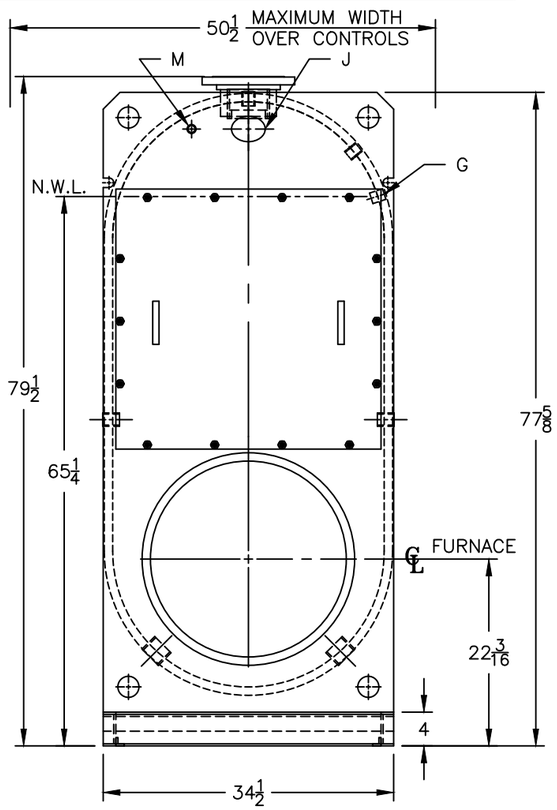


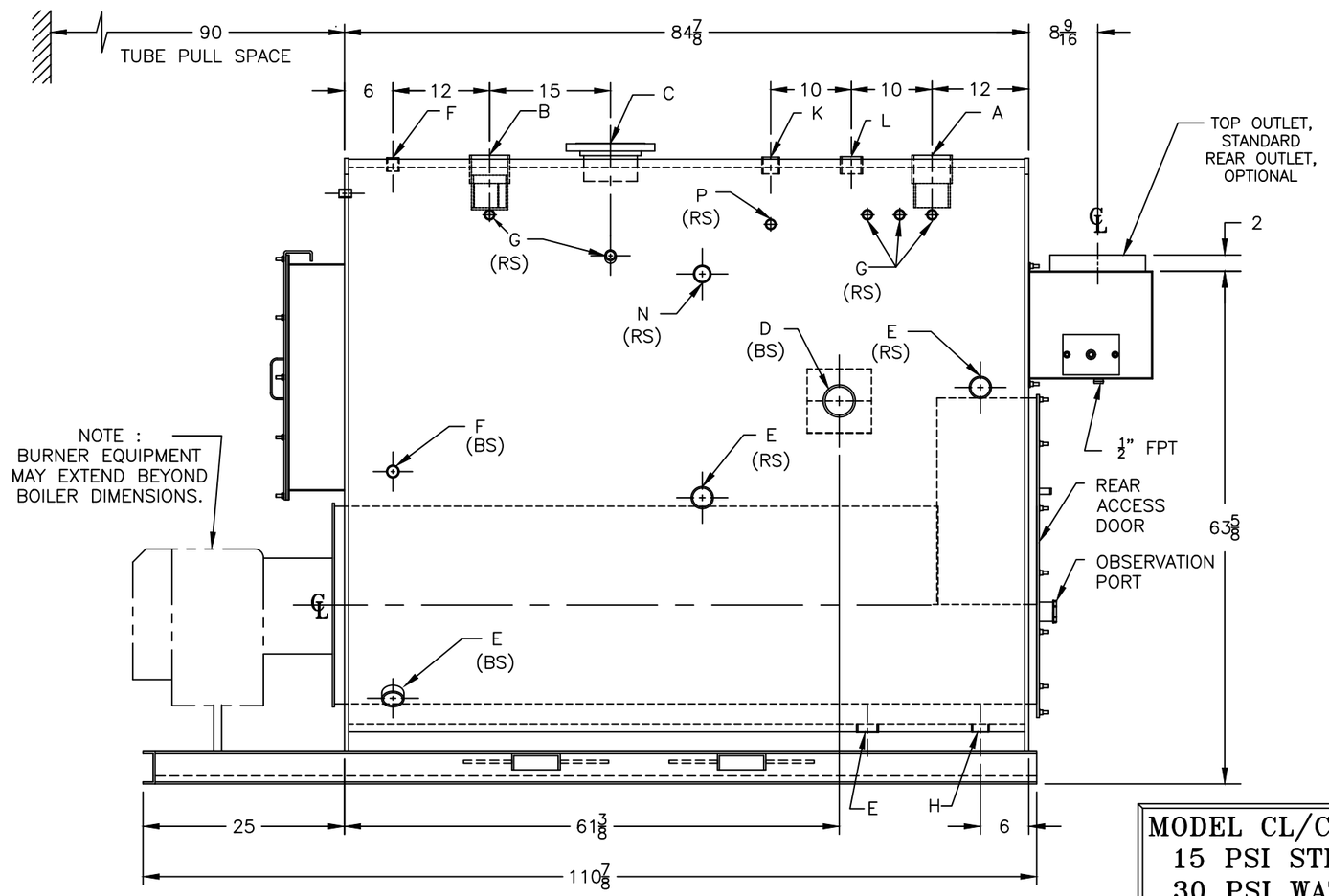


SPECIFICATIONS SUBJECT TO CHANGE WITHOUT NOTICE
ALL CONNECTIONS ARE THREADED UNLESS OTHERWISE SPECIFIED

**MODEL CL/CW-80**
**15 PSI STEAM**
**30 PSI WATER**

THIS DOCUMENT CONTAINS CONFIDENTIAL INFORMATION WHICH IS THE PROPERTY OF BURNHAM COMMERCIAL. THIS DOCUMENT MAY NOT BE REPRODUCED, TRANSFERRED OR USED, OR ITS CONTENTS DISCLOSED, WITHOUT THE WRITTEN PERMISSION OF THE OWNER.