LEGEND

BS = BOTH SIDES
RS = RIGHT SIDE
LS = LEFT SIDE

BURNHAM®
Commercial Boilers

LEGEND CONNECTIONS

A = 3" SUPPLY
B = 1-1/4" RETURN
C = 3" x 4" HANDHOLE
D = 1" WATER COLUMN
E = 3/4" AQUASTAT
F = 1-1/2" BOTTOM BLOWDOWN
G = 1-1/2" SURFACE BLOWOFF
H = 2" AUXILIARY CONNECTION
J = 1" SAFETY VALVE
K = 10" NOMINAL FLUE DIAMETER

RATINGS AND DATA

Shell Diameter : 48"
Gross Output – BHP : 50
Gross Output – MBH : 1674
Gross Output – Lbs/Hr : 1725
Net Rating – MBH : 1290
Net Rating – Sq. Ft. : 5375
Safety Valve – Lbs/Hr. : 1953

Heating Surface – Sq. Ft.
Fireside – 250
Firetubes
Number – 92
Diameter – 2" O.D.

Firing Rate
1000 BTU Gas (MBH) – 2092
140000 BTU/Gal Oil (GPH) – 14.5
150000 BTU/Gal Oil (GPH) – 13.5

Water Content
Pounds – 2468
Gallons (U.S.) – 296
Approximate Weight/LBS.
Dry – 4761
Wet – 7229

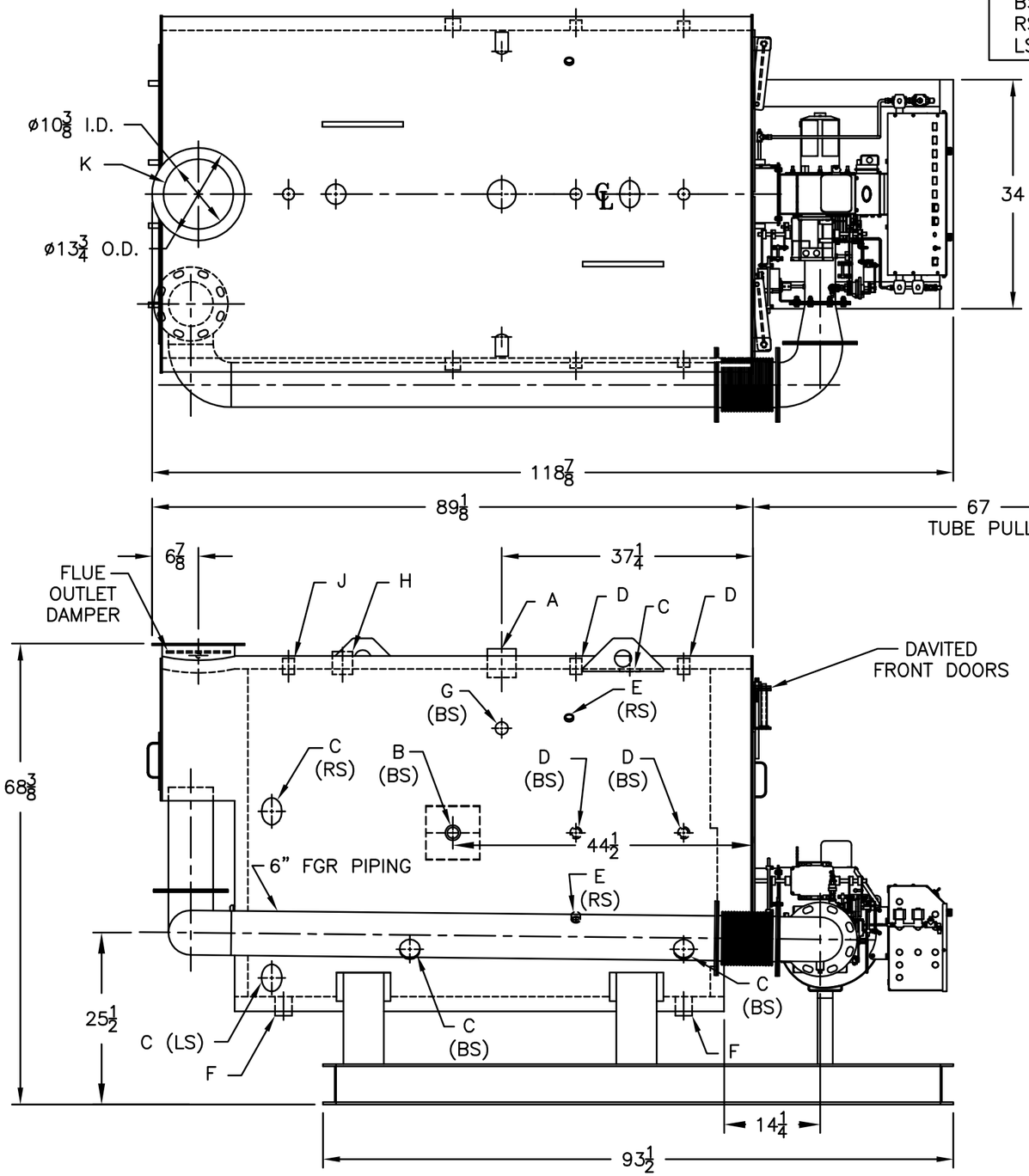

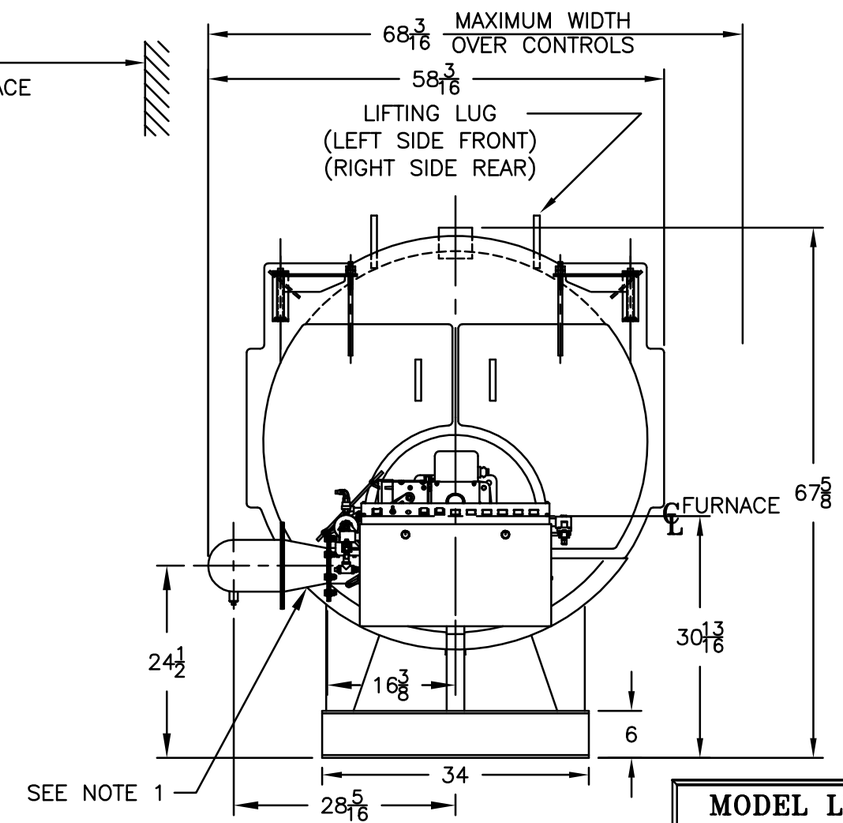

NOTES:
1. FGR REDUCING FITTING MAY BE REQUIRED BASED ON FGR INLET SIZE ON BURNER.

MODEL LN3P-50
50 BHP
POWERFLAME LNIC2
150 PSI STEAM

SPECIFICATIONS SUBJECT TO CHANGE WITHOUT NOTICE ALL CONNECTIONS ARE THREADED UNLESS OTHERWISE SPECIFIED

THIS DOCUMENT CONTAINS CONFIDENTIAL INFORMATION WHICH IS THE PROPERTY OF BURNHAM COMMERCIAL. THIS DOCUMENT MAY NOT BE REPRODUCED, TRANSFERRED OR USED, OR ITS CONTENTS DISCLOSED, WITHOUT THE WRITTEN PERMISSION OF THE OWNER.