BURNHAM®
Commercial Boilers

LEGEND CONNECTIONS

A = 8" FLANGED SUPPLY (150#)
B = 8" FLANGED RETURN (150#)
C = 3" x 4" HANDHOLE
D = 1" WATER COLUMN
E = 3/4" AQUASTAT
F = 2" BOTTOM DRAIN
G = 2" EXPANSION TANK
H = 3/4" GAUGE CONNECTION
J = 2" RELIEF VALVE (4)
K = 12" X 16" MANHOLE

RATINGS AND DATA

Shell Diameter : 98"
Gross Output – BHP : 649.5
Gross Output – MBH : 21742
Net Rating – MBH : 18906
Safety Valve – Lbs/Hr. : 24000

Heating Surface – Sq. Ft.
Fireside – 3000
Firetubes
Number – 264
Diameter – 2.5" O.D.

Firing Rate
1000 BTU Gas (MBH) – 25106
140000 BTU/Gal Oil (GPH) – 173.9
150000 BTU/Gal Oil (GPH) – 162.3

Water Content
Pounds – 35500
Gallons (U.S.) – 4256
Approximate Weight/LBS.
Dry – 33200
Wet – 68700

LEGEND

BS = BOTH SIDES
RS = RIGHT SIDE

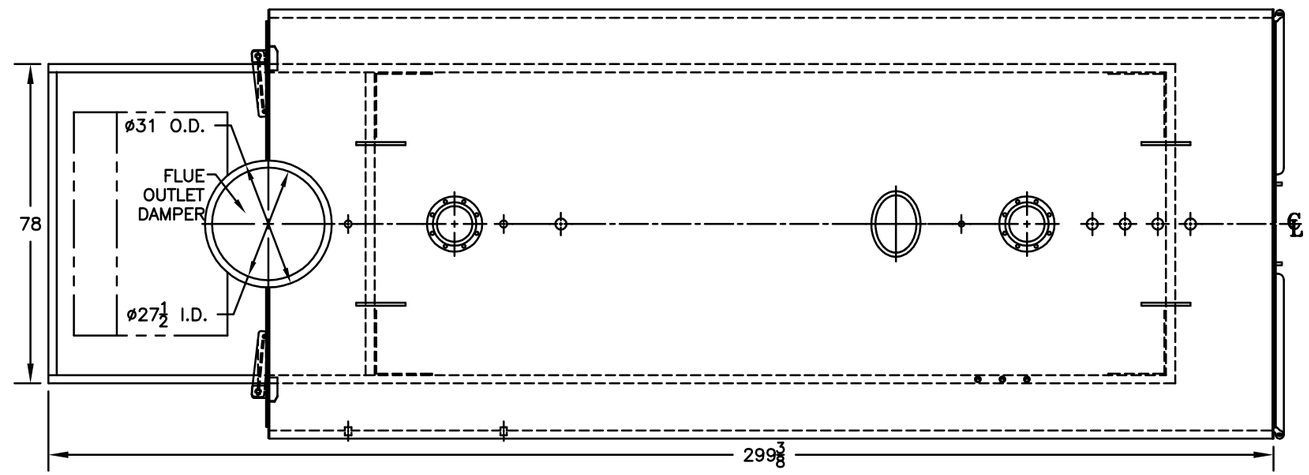

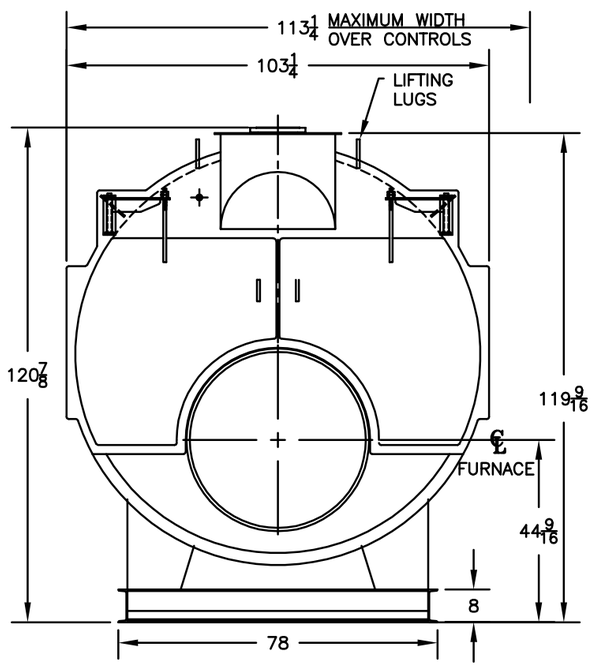

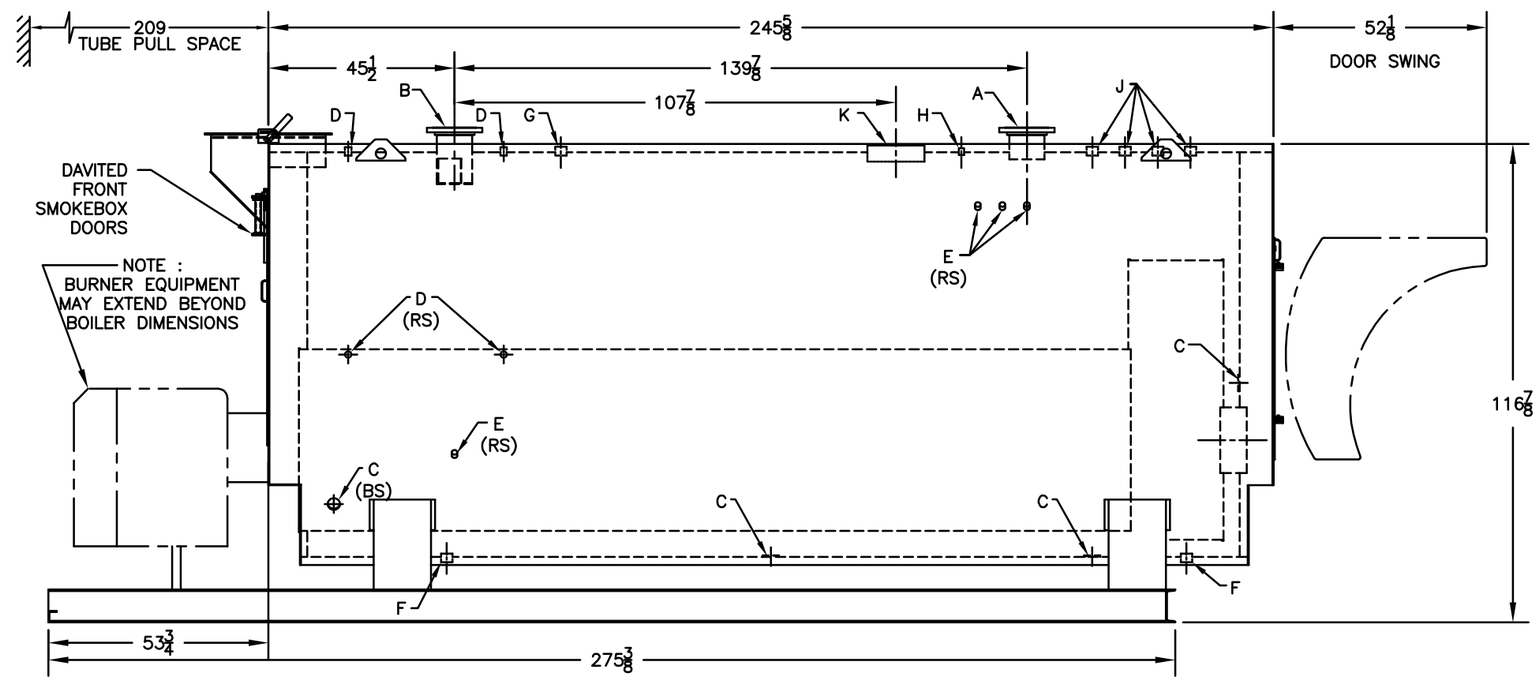

SPECIFICATIONS SUBJECT TO CHANGE WITHOUT NOTICE
ALL CONNECTIONS ARE THREADED UNLESS OTHERWISE SPECIFIED

MODEL 4SW-600
649.5 BHP
30 PSI WATER

DEC 2015 TS-46-25-B