BURNHAM®
Commercial Boilers

LEGEND CONNECTIONS

A = 6" FLANGED SUPPLY (150#)
B = 4" RETURN
C = 3" x 4" HANDHOLE
D = 1" WATER COLUMN
E = 3/4" AQUASTAT
F = 1-1/2" SURFACE BLOWOFF/ WASHOUT
G = 1/2" TEMPERATURE GAUGE
H = 1-1/2" SAFETY/RELIEF VALVE
J = 1" AUXILLIARY CONNECTION
K = 10" NOMINAL FLUE DIAMETER

RATINGS AND DATA

Shell Diameter : $33\frac{1}{8}$"

Heating Surface – Sq. Ft.
Fireside – 194
Waterside – 209
Firetubes
Number – 61
Diameter – 2" O.D.

Furnace
Volume (Cubic Feet) – 29.1

Water Content
Steam – 187 Gal. (U.S.)
Water – 257 Gal. (U.S.)

Approximate Weight (Lb.)
Dry – 3600
Wet (Steam) – 5155
Wet (Water) – 5745

LEGEND

BS = BOTH SIDES
RS = RIGHT SIDE
LS = LEFT SIDE
FB = FRONT OF BOILER
RB = REAR OF BOILER

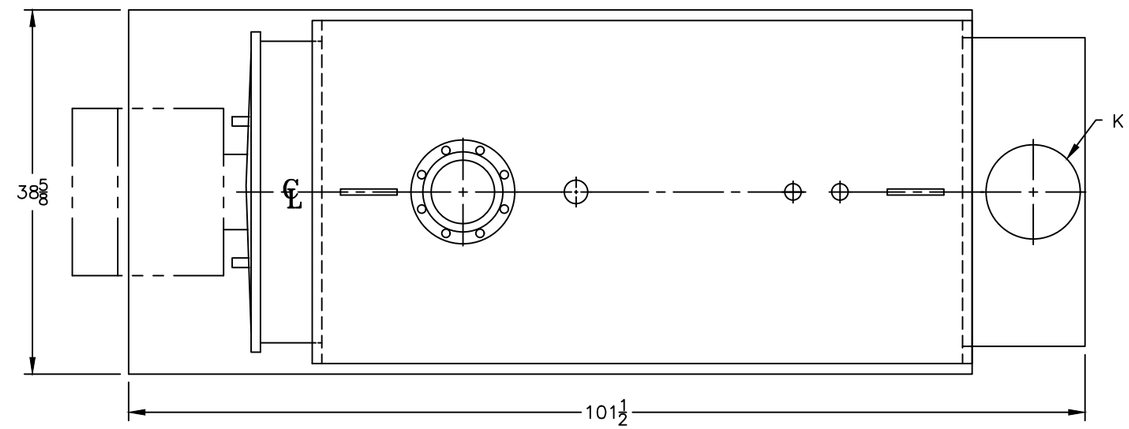

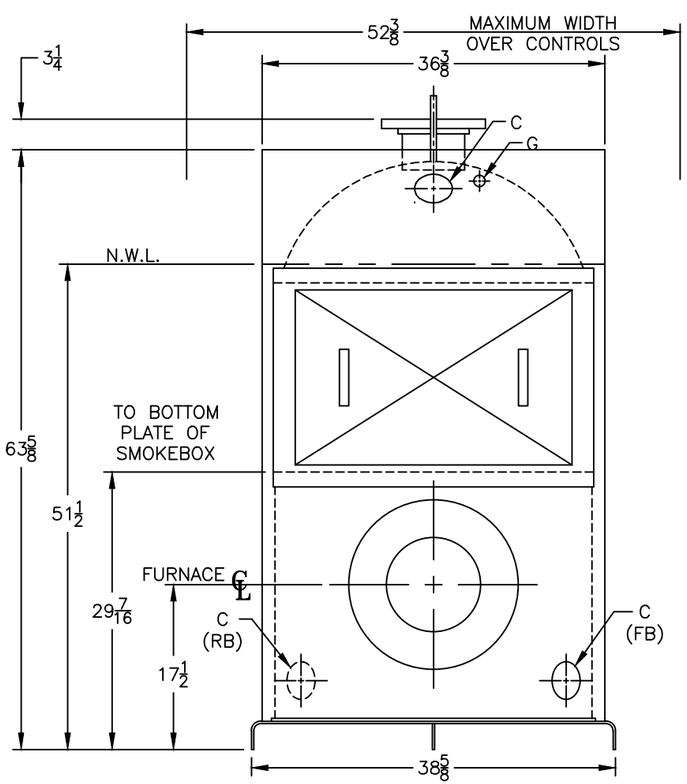

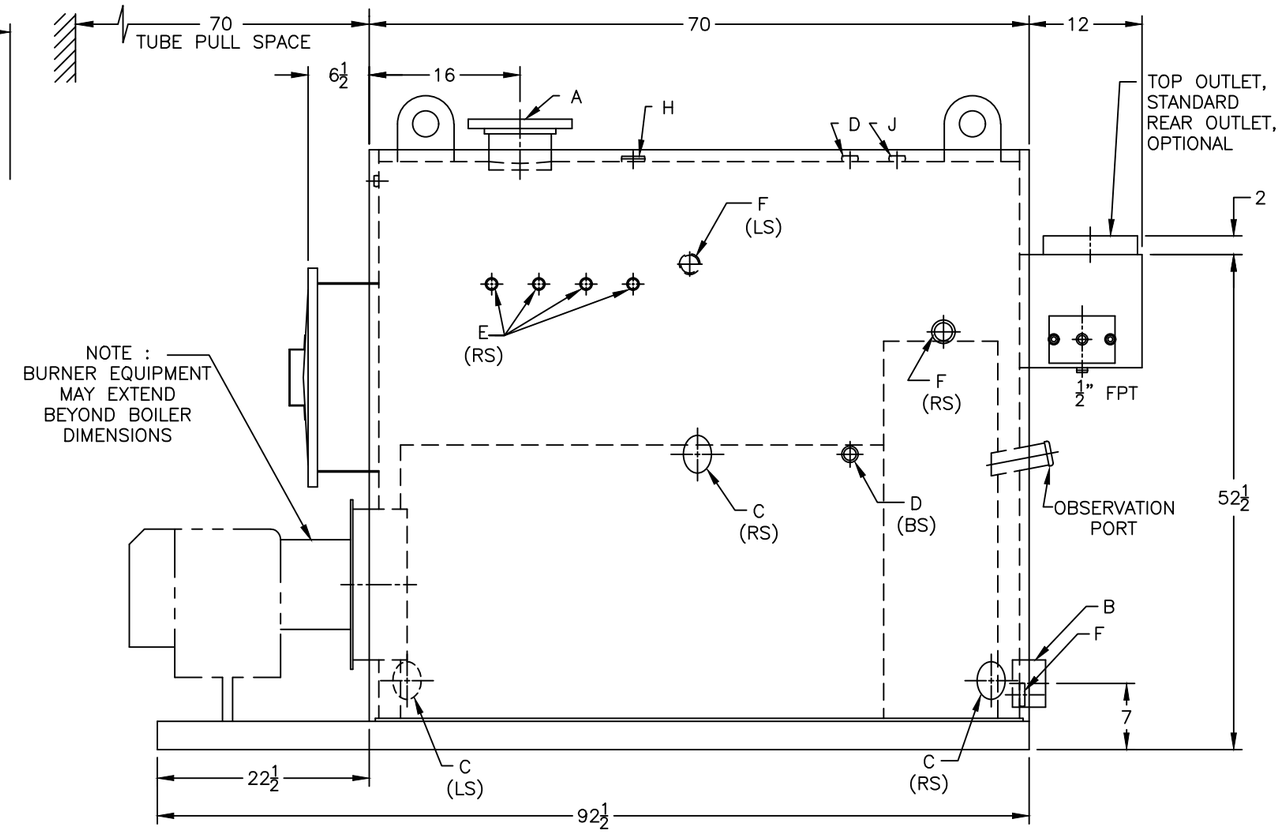

SPECIFICATIONS SUBJECT TO CHANGE WITHOUT NOTICE ALL CONNECTIONS ARE THREADED UNLESS OTHERWISE SPECIFIED
THIS DOCUMENT CONTAINS CONFIDENTIAL INFORMATION WHICH IS THE PROPERTY OF BURNHAM COMMERCIAL. THIS DOCUMENT MAY NOT BE REPRODUCED, TRANSFERRED OR USED, OR ITS CONTENTS DISCLOSED, WITHOUT THE WRITTEN PERMISSION OF THE OWNER.

MODEL 4FH-209A