**BURNHAM®**
Commercial Boilers

## LEGEND CONNECTIONS

A = 8" FLANGED SUPPLY (150#)
B = 4" RETURN
C = 3" x 4" HANDHOLE
D = 1" WATER COLUMN
E = 3/4" AQUASTAT
F = 2" BOTTOM BLOWDOWN
G = 2" SURFACE BLOWOFF
H = 2" AUXILIARY CONNECTION
J = 2" SAFETY VALVE (2)
K = 12" x 16" MANHOLE
L = 16" NOMINAL FLUE DIAMETER

## RATINGS AND DATA

Shell Diameter : 66"
Gross Output – BHP : 155.4
Gross Output – MBH : 5204
Gross Output – Lbs/Hr : 5363
Net Rating – MBH : 4040
Net Rating – Sq. Ft. : 16834
Safety Valve – Lbs/Hr. : 6000

Heating Surface – Sq. Ft.
Fireside – 750
Firetubes
Number – 182
Diameter – 2" O.D.

Firing Rate
1000 BTU Gas (MBH) – 6277
140000 BTU/Gal Oil (GPH) – 43.1
150000 BTU/Gal Oil (GPH) – 40.2

Water Content
Pounds – 6551
Gallons (U.S.) – 785
Approximate Weight/LBS.
Dry – 9700
Wet – 16251

## LEGEND

BS = BOTH SIDES
RS = RIGHT SIDE

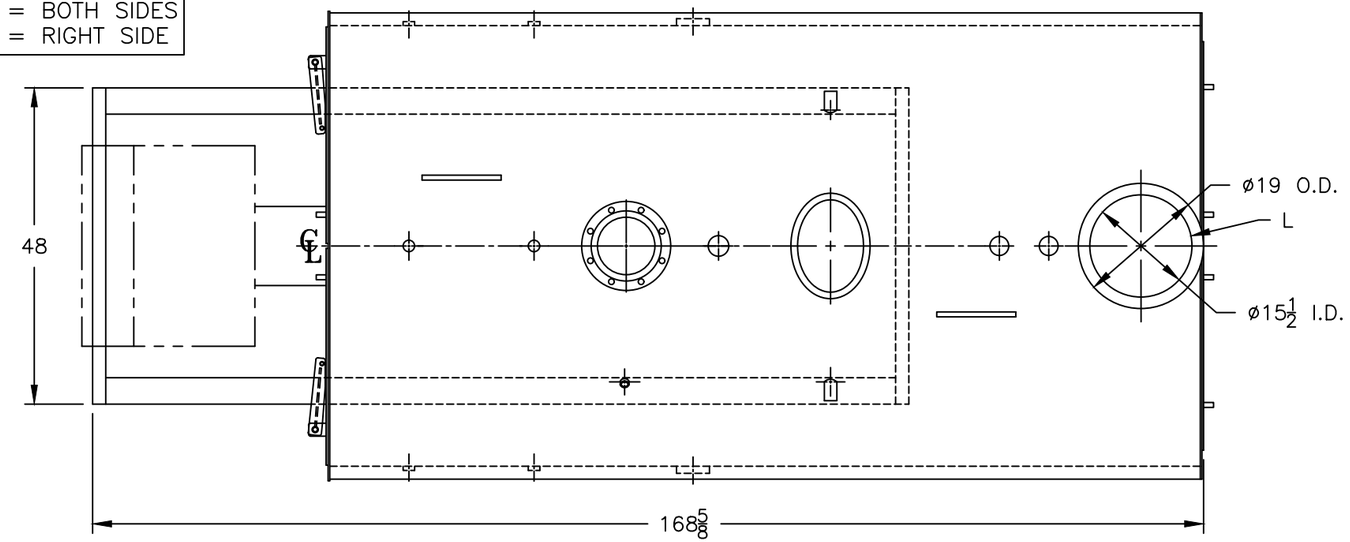


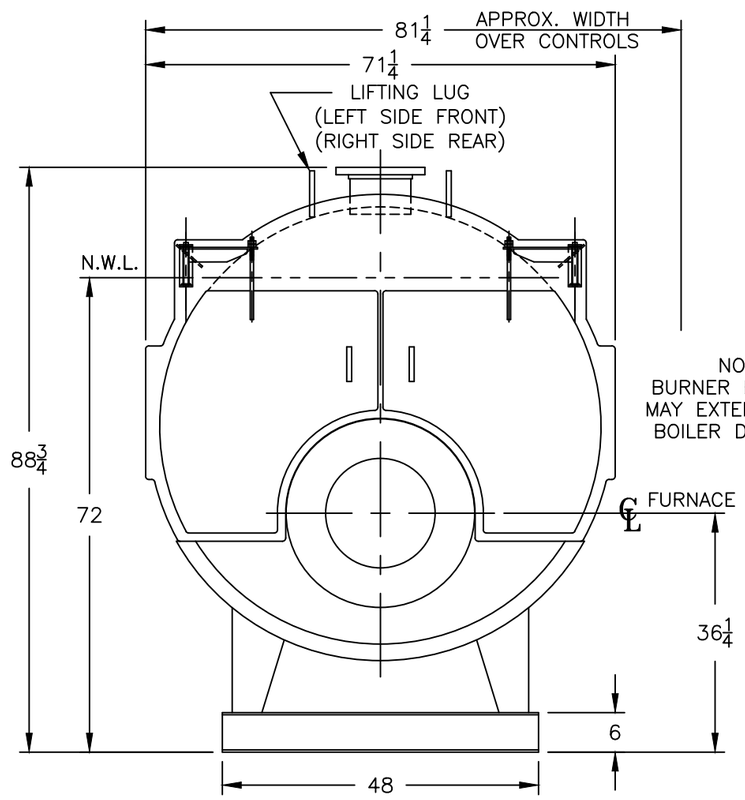


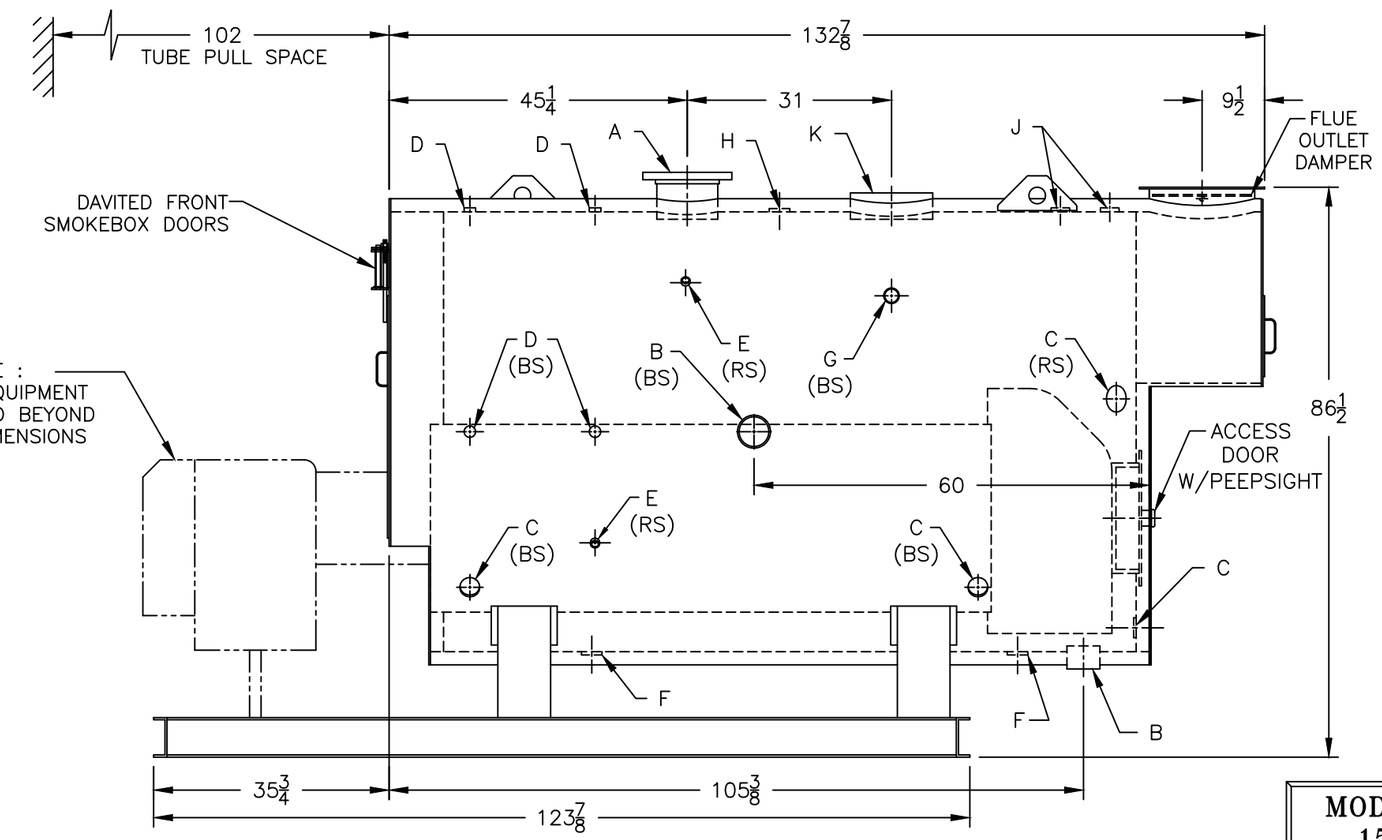


**MODEL 3L-150**
**155.4 BHP**
**15 PSI STEAM**

SPECIFICATIONS SUBJECT TO CHANGE WITHOUT NOTICE ALL CONNECTIONS ARE THREADED UNLESS OTHERWISE SPECIFIED

THIS DOCUMENT CONTAINS CONFIDENTIAL INFORMATION WHICH IS THE PROPERTY OF BURNHAM COMMERCIAL. THIS DOCUMENT MAY NOT BE REPRODUCED, TRANSFERRED OR USED, OR ITS CONTENTS DISCLOSED, WITHOUT THE WRITTEN PERMISSION OF THE OWNER.